[2] BRADLEY, J. N., and PETERKA, A. J. "Hydraulic Design of Stilling Basins" (Basin I). *Proc. ASCE., J. Hyd. Divn.*, Oct. 1957.
[3] RAJARATNAM, N. "An Experimental Study of the Air Entrainment Characteristics of the Hydraulic Jump." Accepted for publication in the *J. Inst. Engs.* (India).
[4] ELEVATORSKY, E. A. "Hydraulic Energy Dissipators." McGraw-Hill Book Co., Inc., N.Y. 1959.
[5] ROUSE, H., SIAO, T. T., and NAGARATNAM, S. "Turbulence Characteristics of the Hydraulic Jump." *Proc. ASCE., J. Hyd. Divn.*, Feb. 1958.
[6] CHOW, VEN, TE. "Open Channel Hydraulics." McGraw-Hill Book Co. Inc., N.Y. 1959.
[7] MOORE, W.L. "Energy Loss at the Base of the Free Overfall." *Trans. ASCE.* 1943.
[8] "Standing Wave or Hydraulic Jump." Published by the Central Board of Irrigation and Power, New Delhi, India, 1950.
[9] RAJARATNAM, N. Ch. 6 of the Thesis "Some Studies on the Hydraulic Jump," Indian Institute of Science, Bangalore 12, India, 1961.
[10] RAMAMOORTHI, A. S. "Effect of Body Shapes on Energy Dissipation in High-Velocity Flow," M.Sc. Thesis. Indian Institute of Science, Bangalore 12, India, 1960.


# Vibration of Penstocks

Following an earlier article on this subject, the author describes a modified method of preventing penstock vibration which has been applied in Japan


By PROF. FUMIKI KITO*


IN his earlier article about the vibration of penstocks in hydro-electric power plants† the author gave: (a) an approximate formula for the natural frequency of vibration of a penstock filled with water and under the influence of static head; (b) a method preventing the vibration of a penstock, together with some results of actual work of prevention. As was pointed out in that article, one way of stopping the vibration is to fix stiffener rings to the penstock, usually attached by spot-welding (Fig. 1), over a span at which vibration is taking place. This method was successfully adopted, under the author's guidance, at many hydro-electric plants in Japan.

Recently, there was a request to the author that the stiffener rings should be fixed without welding them to the penstock wall. The reasons given for this request were that the welding impaired coatings on the interior of the wall, and that it weakened the wall. In answer to this request, the author has proposed to fix stiffener rings tightly to the penstock by means of bolts. Of course, the connection must be welded after completion of the work, in order to avoid loosening, but no welding is made between the stiffener ring and the penstock wall. This method was applied successfully to vibrating penstocks of two hydro-electric power plants in Japan. One of them is at the Kowase plant, the output of which is about 8,000 kW from a vertical-shaft Francis turbine under a total head of 216 m. The diameter of the penstock is 1·50 m. The stiffener ring was made with angle-irons $130 \times 130 \times 9$ mm, consisting of two halves which were tightened together by means of bolts (Fig. 2). The second case is Morozuka power plant, which is a pumped-storage station containing a vertical-shaft Francis turbine and a centrifugal pump in tandem and having a capacity of 50 MW under 230 m head. The diameter of the penstock is 3·20 m. In this case, the stiffener ring was made of steel plate, $200 \times 16$ mm in section. It consisted of three parts, and the connection was also made by bolts (Fig. 3).

According to the author's analytical study, the condition under which this form of stiffener ring is effective is given by the following formula;

$$2 \mid B \mid \leqq F_o \qquad \ldots (1)$$

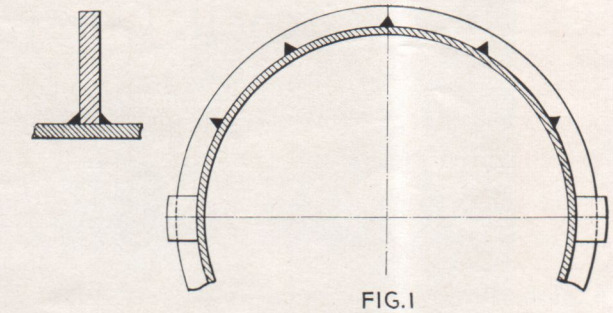

FIG.1

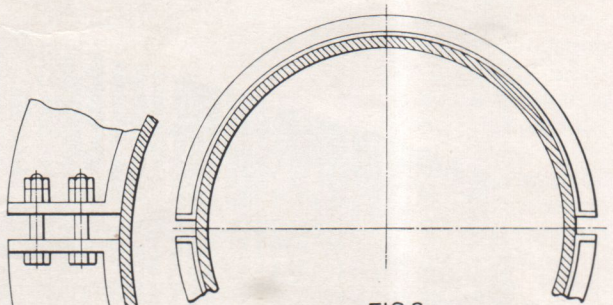

FIG.2

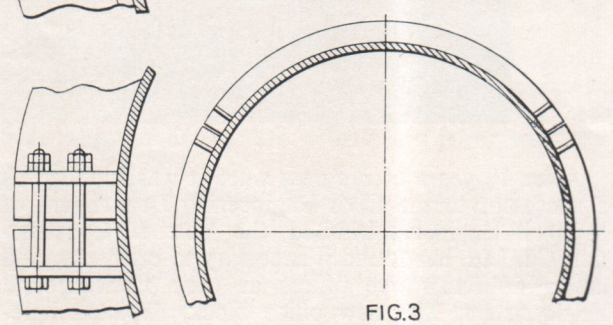

FIG.3

* Keio University, Tokyo, Japan.
† WATER POWER, October 1959, p. 379.

where $B$ and $F_o$ are given by

$$-\frac{B}{a}=\frac{EI}{r_o^4}(n^2-1)^2+\frac{F_o}{r_o}(n^2-1)$$
$$-mA\ \omega^2\left(1+\frac{1}{n^2}\right) \quad \ldots (2)$$
$$F_o=T_o/r_o \quad \ldots (3)$$

respectively, using the following notations;

$r_o$ = radius of the penstock,

$mA$ = mass ($w/g$) per unit length of the stiffener ring,

$EI$ = flexural rigidity of the stiffener ring,

$\omega$ = angular frequency ($=2\pi f$) of vibration,

$a$ = amplitude of vibration ($2a$ = double-amplitude) of the penstock, after the stiffener ring was fixed,

$T_o$ = tension in cross section of the ring due to tightening of the bolts (together with effect of the static head),

$n$ = number of lobes of vibration (a whole number).

It is to be noted that the value of $a$ cannot be exactly known before the stiffener ring is actually fixed, so that an assumed value has to be taken for the first calculation.

Naturally, the number of stiffener rings required for a given span must be greater than that for the case of welded fixing, but the new method (if it may be called so) can avoid the two objections cited above; moreover, it admits of readjustments. It is thought, therefore, that the work of vibration prevention by means of stiffener rings will in future be done by this new method.

**Numerical Example**

As a numerical example to the above-mentioned formulae (1), (2), and (3), let us quote the case of the Marozuka plant. In this case we have, $r_o=160$ cm, $A=32$ cm$^2$, $I=1{,}070$ cm$^4$, $EI=21{\cdot}4\times10^8$, $mA=2{\cdot}54\times10^{-4}$ kg-sec$^2$/cm$^2$, $n=2$. The vibration frequency being found (by actual measurement) to be about 5 cycles per second, we have $\omega=2\pi\times5=31{\cdot}4$ radian/sec. Suppose that we tighten the stiffener ring by bolts, causing in its cross section a tensile stress of 50 kg/cm$^2$. Then we shall have $T_o=1{,}600$ kg, and $F_o=1{,}600\div160=10$ kg/cm.

Putting these values into the equation (2), we have,

$$-\frac{B}{a}=\frac{21{\cdot}4\times10^8}{(160)^4}\times9+\frac{10}{160}\times3$$
$$-2{\cdot}54\times10^{-4}\times(31{\cdot}4)^2\times1{\cdot}25$$
$$=29{\cdot}3+0{\cdot}188-0{\cdot}313=29{\cdot}2$$

The amplitude of vibration $a$ was initially about 2 mm, but after the stiffener is fixed we may assume that $a$ will be reduced to 0·50 mm. Thus we have, $-B=29{\cdot}2\times0{\cdot}05=1{\cdot}47$, and we may say fairly well that the stiffener ring is effective. Actually, the test after fixing the stiffener rings showed a vibration amplitude less than $a=0{\cdot}25$ mm.

# Mitchell Construction Expansion

After 18 years of progress since it was founded as a successor to the Civil Engineering Department of Mitchell Engineers Limited, the Mitchell Construction Co. Ltd. has found it necessary to build new and larger administrative offices at their Peterborough headquarters. The new office block, depicted herewith, is a three-storey building in modern style, 250 ft long by 40 ft wide, and arranged so that extensions to provide 75% additional office space can easily be added. The interior is planned to afford the utmost flexibility in rearranging departments as required.

Mitchell Construction Co. Ltd. have become well